(12) INTERNATIONAL APPLICATION PUBLISHED UNDER THE PATENT COOPERATION TREATY (PCT)

(19) World Intellectual Property Organization
International Bureau

(43) International Publication Date
19 November 2009 (19.11.2009)

PCT

(10) International Publication Number
WO 2009/138757 A2

(51) International Patent Classification:
C10B 53/02 (2006.01)

(21) International Application Number:
PCT/GB2009/001225

(22) International Filing Date:
14 May 2009 (14.05.2009)

(25) Filing Language: English

(26) Publication Language: English

(30) Priority Data:
0808739.7 14 May 2008 (14.05.2008) GB

(71) Applicant *(for all designated States except US)*: **ASTON UNIVERSITY** [GB/GB]; Aston Triangle, Birmingham B4 7ET (GB).

(72) Inventors; and
(75) Inventors/Applicants *(for US only)*: **HORNUNG, Andreas** [DE/GB]; Chemical Engineering and Applied Chemistry, Aston University, Aston Triangle, Birmingham B4 7ET (GB). **APFELBACHER, Andreas** [DE/GB]; Chemical Engineering and Applied Chemistry, Aston University, Aston Triangle, Birmingham B4 7ET (GB).

(74) Agent: **NAYLOR, Matthew**; Mewburn Ellis LLP, 33 Gutter Lane, London EC2V 8AS (GB).

(81) Designated States *(unless otherwise indicated, for every kind of national protection available)*: AE, AG, AL, AM, AO, AT, AU, AZ, BA, BB, BG, BH, BR, BW, BY, BZ, CA, CH, CN, CO, CR, CU, CZ, DE, DK, DM, DO, DZ, EC, EE, EG, ES, FI, GB, GD, GE, GH, GM, GT, HN, HR, HU, ID, IL, IN, IS, JP, KE, KG, KM, KN, KP, KR, KZ, LA, LC, LK, LR, LS, LT, LU, LY, MA, MD, ME, MG, MK, MN, MW, MX, MY, MZ, NA, NG, NI, NO, NZ, OM, PG, PH, PL, PT, RO, RS, RU, SC, SD, SE, SG, SK, SL, SM, ST, SV, SY, TJ, TM, TN, TR, TT, TZ, UA, UG, US, UZ, VC, VN, ZA, ZM, ZW.

(84) Designated States *(unless otherwise indicated, for every kind of regional protection available)*: ARIPO (BW, GH, GM, KE, LS, MW, MZ, NA, SD, SL, SZ, TZ, UG, ZM, ZW), Eurasian (AM, AZ, BY, KG, KZ, MD, RU, TJ, TM), European (AT, BE, BG, CH, CY, CZ, DE, DK, EE, ES, FI, FR, GB, GR, HR, HU, IE, IS, IT, LT, LU, LV, MC, MK, MT, NL, NO, PL, PT, RO, SE, SI, SK, TR), OAPI (BF, BJ, CF, CG, CI, CM, GA, GN, GQ, GW, ML, MR, NE, SN, TD, TG).

Declarations under Rule 4.17:

— *of inventorship (Rule 4.17(iv))*

Published:

— *without international search report and to be republished upon receipt of that report (Rule 48.2(g))*

(54) Title: THERMAL TREATMENT OF BIOMASS

(57) Abstract: A biomass pyrolysis process is provided in which biomass feedstock is mixed with a heat carrier. The heat carrier at least partly comprises char. The ratio by weight of biomass to char is in the range 1:1 to 1:20. The process may be carried out by in a screw/auger pyrolysis reactor in which the solid feedstock components are conveyed along the reactor by a first screw. A second screw conveys at least a portion of the solid products of the biomass pyrolysis back to a heat transfer medium input port. Thus, the heat transfer medium includes char from the biomass pyrolysis.

WO 2009/138757 A2

THERMAL TREATMENT OF BIOMASS

BACKGROUND TO THE INVENTION

Field of the invention

The present invention relates to the thermal treatment of biomass. It has particular, but not exclusive, application to biomass pyrolysis reformers for the production of renewable gaseous and solid fuels from biomass.

Related art

Biomass pyrolysis is the thermal decomposition of biomass (e.g. plant material such as wood and wood bark) substantially in the absence of oxygen. Biomass is typically a mixture of hemicellulose, cellulose, lignin and small amounts of other organics. These components typically pyrolyse or degrade at different rates and by different mechanisms and pathways.

One traditional example of biomass pyrolysis is the production of charcoal, where the main product of the pyrolysis is char. Alternative biomass pyrolysis techniques provide a product which, after cooling, includes a substantial proportion of liquid. This liquid is typically a dark brown liquid having a heating value that is around

one half the heating value of conventional fuel oil. The liquid is typically referred to as bio-oil. In some circumstances, it is the bio-oil which is the most valuable product of the pyrolysis reaction, since bio-oil can be easily stored for later use, e.g. for heat and/or electricity generation. However, in other circumstances, the gas products may be more useful, e.g. in rural locations for combined heat and power (CHP) applications where the gas may be used to produce electricity.

The rate and extent of decomposition of the components of biomass depends on the process parameters of the pyrolysis reactor. In turn, these process parameters may also have an effect on the subsequent behaviour of the product, e.g. by secondary reactions such as cracking (of higher molecular mass products) or condensation reactions (of lower molecular mass products).

In order to produce a high proportion of gas phase by a pyrolysis process, it is typical to carry out a gasification-type pyrolysis process. In such a gasification process, it is typical to heat the solid biomass to 300-600°C to achieve pyrolysis of the biomass, the products of which are solid char, condensable organic compounds (including tar), water and gases. Subsequently in the process, reactions are promoted above about 700°C (typically at around 800°C) to decrease the liquid (vapour)

concentration to produce further useful gas phase products, and also to gasify some of the char via gas-solid and gas-gas interactions. There are several different types of gasifier reactor types that have been characterised. See, for example, A. V. Bridgwater ("Renewable fuels and chemicals by thermal processing of biomass" Chemical Engineering Journal Volume 91, Issues 2-3, 15 March 2003, pages 87-102), which disclosure briefly reviews the characteristics of the following gasifier reactor types: downdraft fixed bed, updraft fixed bed, bubbling fluid bed, circulating fluid bed, entrained flow, twin fluid bed, screw/auger kiln, rotary kiln, cyclonic and vortex.

In each of the gasifier reactor types indicated above, it is necessary to provide a heat transfer medium in order to achieve rapid and efficient heating of the biomass feedstock and the products of pyrolysis to promote gasification. Typically particles such as sand are used as the heat transfer medium.

WO 02/50484 discloses an apparatus for the thermal treatment of material. It is primarily intended for the recycling of electronics waste material, but can also be used for the thermal treatment of biomass. WO 02/50484 discloses a screw kiln in which thermally conductive particles are provided in the feedstock. These particles are spheres of metal, ceramics or SiC. Primarily they have the function of

cleaning the interior surface of the screw kiln. On exiting the kiln, the thermally conductive particles may be re-used by being conducted back to the entrance to the kiln along a hollow shaft of the kiln.

SUMMARY OF THE INVENTION

The present inventors have realised that particular advantages may be gained by using a high proportion of char in the pyrolysis process.

Accordingly, in a first preferred aspect, the present invention provides a biomass pyrolysis process in which biomass feedstock is mixed with a heat carrier, the heat carrier at least partly comprising char, the ratio by weight of biomass to char being 1:1 to 1:20.

The present inventors consider that the use of high proportions of char to biomass promotes the formation of synthesis gas (syngas - a mixture of CO and H_2) and the formation of lower organics. In general, the use of high proportions of char are considered to reduce the vapour (liquid) phase proportion of the pyrolysis products. Surprisingly, this is advantageous in some circumstances, such as in combined heat and power (CHP) applications.

Preferred or optional features of the first aspect of the invention will now be set out. These may be combined either singly or in any combination, unless the context demands otherwise.

Preferably the process is a continuous (or quasi-continuous) one and the ratio by weight of biomass to char is the steady state ratio of these components during the process.

The upper limit for the ratio by weight of biomass to char may more preferably be 1:1.5 or less or, more preferably still, 1:2 or less.

The lower limit of the ratio by weight of biomass to char may more preferably be 1:15 or more or, more preferably still, 1:10 or more or 1:5 or more.

Preferably, the process uses a pyrolysis reactor in which the solid feedstock components are conveyed along the reactor. For example, the pyrolysis reactor may be a screw/auger kiln.

Alternatively, the process may use a pyrolysis reactor in which a bed of biomass and heat carrier is mixed but not conveyed during the pyrolysis reaction.

Preferably the process is operated at a temperature of 600°C or lower. This is significantly lower than typical gasification temperatures (typically around 800°C) and yet the gas phase products of the process are preferably comparable to the gas phase products of gasification.

In order to provide a high proportion of char relative to biomass in the process, it is preferred to recycle at least some of the char that is produced in the pyrolysis process itself. One benefit of this is that the char can remain hot from its formation by the biomass process and thus can make a significant contribution to the transfer of heat to the new biomass for pyrolysis. Thus, the char can form part (or indeed all, in some circumstances) of the heat carrier for the pyrolysis process. Alternatively it is possible to store char for later use in the reactor. The disadvantage of this is that the requirement to heat the char will reduce the efficiency of the overall process.

Similar comments apply to ash formed in the pyrolysis process - the heat carrier in subsequent pyrolysis processes may comprise ash, at least in part. However, it is considered that ash does not play so significant a role in the pyrolysis process as char, since it is considered that a part of the char is consumed in the reformation reaction:

$$C + H_2O \rightarrow CO + H_2$$

for the production of synthesis gas, or syngas. Syngas has a lower heating value than methane (natural gas) for example, but still provides a useful and convenient fuel for the subsequent generation of electricity in combined heat and power (CHP) apparatus.

The present inventors have realised that this use of one or more solid products of the biomass pyrolysis process as all or part of a heat transfer medium constitutes a separate, independent aspect of the invention, which may be combined with the first aspect, and any other aspects, of the invention.

Thus, in a second aspect, the present invention provides a biomass pyrolysis process including the steps:
conveying biomass feedstock and heat transfer medium from respective biomass feedstock and heat transfer medium input ports through a pyrolysis zone of a biomass pyrolysis apparatus to produce at least solid and gaseous biomass pyrolysis products; and
conveying at least a portion of the solid products from an output port of the apparatus back to the heat transfer medium input port.

In a third aspect, the present invention provides a biomass pyrolysis apparatus having:
a biomass feedstock input port;

a heat transfer medium input port;

a first conveying means for conveying the biomass feedstock and heat transfer medium through a pyrolysis zone of the apparatus;

an output port for solid products of the biomass pyrolysis; and

a second conveying means for conveying at least a portion of the solid products of the biomass pyrolysis back to the heat transfer medium input port, so that the heat transfer medium includes said solid products of the biomass pyrolysis.

Preferably, the first and second conveying means are located with respect to each other so that one of them surrounds at least a part of the other. In this way, the heat of the second conveying means may serve at least partially to heat or insulate the first conveying means. For example, the second conveying means may be disposed annularly around the first conveying means. Alternatively, the first and second conveying means may be located adjacent one another.

It is specifically envisaged that the second or third aspects may be combined with the first aspect, including with any combination of preferred or optional features of the first aspect.

Still further preferred or optional features are set out below, these being combinable in any combination with any

aspect of the invention, unless the context demands otherwise.

It is preferred that not all of the char produced in the biomass pyrolysis process is recycled into the biomass pyrolysis process. Preferably 90% or less (by weight), more preferably 80% or less, 70% or less, 60% or less or 50% or less is recycled into the biomass pyrolysis process. At least a portion of the remaining char may be combusted, in order to provide heat for the biomass pyrolysis process. Preferably, at least 10% of the char (by weight) is combusted in this way, more preferably at least 20%, at least 30%, at least 40% or at least 50%.

At least a portion of the products of the pyrolysis process may be conveyed to a gasifier apparatus. Preferably the gasifier apparatus operates at a temperature of at least 700°C (typically about 800°C). Preferably the gas and/or vapour products of the pyrolysis process are conveyed to the gasifier. Optionally, further biomass is introduced into the gasifier. The gasifier is preferably a fluidised bed gasifier. Alternatively, a downdraft gasifier may be used. Preferably the biomass introduced into the gasifier is low ash biomass, such as wood (but preferably not wood bark). Low ash biomass is preferred, in order to avoid corrosion and/or blockage of the fluidised bed.

For example, an outlet of the pyrolysis apparatus may be connected to an inlet of the gasifier apparatus. In this way, the vapour products of the pyrolysis apparatus may be provided at the pyrolysis zone of the gasifier apparatus. The vapour products of the pyrolysis apparatus may be substantially ash-free. This may provide efficiency benefits to the gasification process.

The pyrolysis apparatus may operate at an internal pressure above atmospheric pressure. For example, the pyrolysis apparatus may operate at at least 3 mbar over atmospheric pressure (typically at least 50, or 200-300 mbar over atmospheric pressure, or in some cases up to about 30 bar over atmospheric pressure). This allows the vapour pyrolysis products effectively to be pumped into the gasifier apparatus, driven by the over pressure.

BRIEF DESCRIPTION OF THE DRAWINGS

Preferred embodiments of the present invention will now be described, by way of example, with reference to the accompanying drawings, in which:

Fig. 1 shows a gas chromatography spectrum for the water-based phase product of a rapeseed biomass pyrolysis process, in which the abscissa is in units of time (minutes) and the ordinate is in arbitrary units of concentration.

Fig. 2 shows a gas chromatography spectrum for the oily phase product of the same rapeseed biomass pyrolysis process as analysed in Fig. 1, the axes having a similar format to Fig. 1.

Fig. 3 show a schematic longitudinal cross sectional view of a pyrolysis apparatus according to a preferred embodiment of the invention.

Fig. 4 shows a longitudinal schematic view of a further preferred embodiment of a pyrolysis apparatus according to the present invention.

Figs. 5-7 show longitudinal schematic views of the main components of the apparatus shown in Fig. 4.

Fig. 8 shows a schematic view of a pyrolysis apparatus integrated with a gasifier apparatus.

DETAILED DESCRIPTION OF THE PREFERRED EMBODIMENTS, AND FURTHER PREFERRED AND/OR OPTIONAL FEATURES

It is known that biomass pyrolysis products are complex mixtures of different compounds. It is typical for the liquid (vapour) phases of biomass pyrolysis to include an oily phase with relatively low water content and a water-based phase with relatively high water content.

Fig. 1 shows a gas chromatography spectrum for the water-based phase of a biomass pyrolysis product in which the biomass was rapeseed, pyrolysed by an intermediate pyrolysis

process. The water content of the water-based phase was determined to be 80.42%. The results of analysis of the spectrum are set out in the following Tables 1 and 2:

Table 1: Summary of water-based phase

	wet oil	dry oil
Substance group	**wt.%**	**wt.%**
Acids	2.031	10.372
Nonaromatic Alcohols	0.000	0.000
Nonaromatic Aldehydes	0.000	0.000
Nonaromatic Ketones	0.100	0.511
Furans	0.086	0.438
Pyrans	0.000	0.000
Sugars	0.382	1.949
Benzene	0.000	0.000
Catechols	0.020	0.103
Aromatic Aldehydes	0.000	0.000
Aromatic Ketones	0.000	0.000
Lignin derived Phenols	0.012	0.061
Guaiacols / Methoxy phenols	0.000	0.000
Syringols / Dimethoxy phenols	0.028	0.144
Miscellaneous	0.000	0.000
Total	**2.659**	**13.579**

Table 2: Detailed analysis of water-based phase

	Wet oil	Dry oil
Compound	**wt.%**	**wt.%**
Acids	**2.031**	**10.372**
Acetic acid	1.598	8.161
Propanoic acid	0.355	1.815
Propanoic acid, 2-methyl- *	0.015	0.076
poss: Acid compound: base mass 60, MW ? **	0.021	0.105
Pentanoic acid, 3-methyl- **	0.006	0.030
Pentanoic acid, 4-methyl- **	0.016	0.079
poss: Hexenoic acid **	0.005	0.027
unknown aliphatic acid, MW = ? **	0.005	0.028
poss: Heptenoic acid **	0.010	0.052
Nonaromatic Alcohols	**0.000**	**0.000**
Nonaromatic Aldehydes	**0.000**	**0.000**
Nonaromatic Ketones	**0.100**	**0.511**
Butanone, 2-	0.010	0.049

3-Pentene-2-one, 4-methyl- *	0.041	0.207
Diacetone alcohol (Inpurity from Acetone) *	0.017	0.088
2-Cyclopenten-1-one, 2-hydroxy-3-methyl-; MCP; Cycloten	0.033	0.166
Furans	**0.086**	**0.438**
Furfuryl alcohol, 2-	0.056	0.287
Butyrolactone, γ-	0.022	0.112
lacton derivative	0.008	0.040
Pyrans	**0.000**	**0.000**
Sugars	**0.382**	**1.949**
α-D-Glucopyranose, 1,4:3,6-dianhydro-	0.101	0.515
Arabinofuranose, 1,5-anhydro-	0.103	0.524
ß-D-Xylofuranose, 1,5-anhydro-	0.027	0.138
unknown Anhydrosugar **	0.009	0.045
poss: Anhydro-d-mannosan **	0.006	0.032
unknown Dianhydrosugar **	0.014	0.069
unknown Anhydrosugar **	0.005	0.024
Levoglucosan; ß-D-Glucopyranose, α-anhydro-	0.118	0.600
Benzene	**0.000**	**0.000**
Catechols	**0.020**	**0.103**
Hydroquinone; Benzene, 1,4-dihydroxy-	0.020	0.103
Aromatic Aldehydes	**0.000**	**0.000**
Aromatic Ketones	**0.000**	**0.000**
Lignin derived Phenols	**0.012**	**0.061**
Phenol	0.012	0.061
Guaiacols / Methoxy phenols	**0.000**	**0.000**
Syringols / Dimethoxy phenols	**0.028**	**0.144**
Syringol; Phenol, 2,6-dimethoxy-	0.011	0.056
Syringol, 4-ethyl-	0.014	0.069
Syringol, 4-vinyl-	0.004	0.019
Miscellaneous	**0.000**	**0.000**
Nitrogen containing compounds	**0.919**	**4.696**
Pyridine *	0.008	0.043
Pyrrole *	0.011	0.055
poss: Pyrazine, methyl- **	0.008	0.041
2-Pentanone, 4-amino-4-methyl- MW 100 *	0.056	0.287
similar to Pentanone, amino-methyl- (43,58,100) *	0.106	0.543
Acetamide *	0.051	0.260
Acetamide, N,N-dimethyl- **	0.005	0.027
poss: Acetamide, N-methyl- **	0.005	0.027
Propanamide *	0.013	0.067
poss: Butanamide, 3-methyl- **	0.016	0.081
Piperidone, tetramethyl- MW 155 ***	0.009	0.047

2-Pyrrolidinone *	0.067	0.341
2,5-Pyrrolidinone, 1-methyl- **	0.013	0.066
poss: Pyridinone, dihydro-methyl- MW 111 **	0.006	0.031
poss: Pentanamide, 4-methyl- **	0.004	0.022
poss: Pyrrolidine, 1-acetyl- ***	0.005	0.024
poss: Pyrazole, 5-amino-3-methyl- ****	0.004	0.021
poss: Pyridinol, methyl- **	0.009	0.044
poss: Pyridinol or homologous ***	0.107	0.545
poss: Pyrrolidinedione ***	0.055	0.283
poss: Pyridinol, methyl- *	0.007	0.033
unknown Triazine- or similar compound MW 113 ****	0.012	0.059
poss: Pyridin-carboxamide ****	0.005	0.028
unknown Pyrrolinone compound ****	0.005	0.025
unknown Hydantoin compound ****	0.003	0.014
poss: 2,4-Imidazolidinedione, 5-methyl- MW 114 ***	0.062	0.315
unknown Hydantoin compound ****	0.018	0.091
unknown Amide compound: base mass 72,114 MW ? ****	0.005	0.026
unknown Hydantoin compound ****	0.036	0.182
poss: Hydantoin or imidazolidinedione compound: base mass 100 MW ? ****	0.019	0.099
unknown Piperazinedione compound ****	0.004	0.022
unknown Piperazinedione compound ****	0.003	0.016
unknown Pyrrolidin compound ****	0.015	0.076
unknown Pyrrolidin compound ****	0.012	0.059
poss: Pyrrol compound MW 154 ****	0.039	0.199
poss: Pyroglutamic acid ****	0.013	0.067
unknown Hydantoin compound ****	0.012	0.061
poss: Pyrrol compound: base mass 70, MW 154 ****	0.011	0.057
unknown Pyrrol compound ****	0.006	0.030
unknown Pyrrol compound ****	0.052	0.263
unknown Pyrrol compound ****	0.011	0.058
unknown Pyrrol compound ****	0.012	0.061
other unknown compounds	**0.059**	**0.304**
no MS peak found	0.009	0.048
no lib-spectrum found: base mass 57, MW 126	0.008	0.041
unknown overlapping compounds	0.012	0.062
unknown overlapping compounds	0.004	0.022
overlapping compounds	0.005	0.028
no lib-spectrum found: base mass 99,132 MW ?	0.005	0.023
no lib-spectrum found: base mass 42, MW ?	0.009	0.047
no lib-spectrum found: base masses 42,98 MW ?	0.004	0.019
no lib-spectrum found: base masses 69,112 MW 140	0.003	0.014

* = from library search with high quality, no standard, RRF = 1
** = isomeric or homologous compound, prefixes = ?, RRF = 1
*** = best library search spectrum, quality 50-70%, RRF = 1
**** = best library search spectrum, quality 40-50%, RRF = 1 / no library spectrum found

Fig. 2 shows a gas chromatography spectrum for the oily phase of the same rapeseed biomass pyrolysis product as analysed in Fig. 1. The water content of the oily phase was

determined to be 28.13%. The results of analysis of the spectrum are set out in the following Tables 3 and 4:

Table 3: Summary of oily phase

	wet oil	dry oil
Substance group	**wt.%**	**wt.%**
Acids	0.218	0.303
Nonaromatic Alcohols	0.000	0.000
Nonaromatic Aldehydes	0.000	0.000
Nonaromatic Ketones	0.243	0.338
Furans	0.116	0.161
Pyrans	0.000	0.000
Sugars	0.000	0.000
Benzene	0.222	0.308
Catechols	0.042	0.059
Aromatic Aldehydes	0.000	0.000
Aromatic Ketones	0.000	0.000
Lignin derived Phenols	0.822	1.144
Guaiacols / Methoxy phenols	0.040	0.056
Syringols / Dimethoxy phenols	0.350	0.487
Nitrogen containing compounds	3.267	4.546
Homologous aliphatic chains	1.951	2.715
other unknown compounds	0.788	1.096
FID peak (no MS peak)	0.096	0.133
Miscellaneous	0.000	0.000
Total	**8.156**	**11.348**

Table 4: Detailed analysis of oily phase

Compound	wt.%	wt.%
Acids	**0.218**	**0.303**
Acetic acid	0.218	0.303
Nonaromatic Alcohols	**0.000**	**0.000**
Nonaromatic Aldehydes	**0.000**	**0.000**
Nonaromatic Ketones	**0.243**	**0.338**
Butanone, 2-	0.046	0.064
poss: 5-Hexene-2-one *	0.025	0.034
3-Pentene-2-one, 4-methyl- *	0.102	0.142
2-Cyclopenten-1-one, 2,3-dimethyl-	0.071	0.099
Furans	**0.116**	**0.161**
Furfuryl alcohol, 2-	0.116	0.161

Pyrans	**0.000**	**0.000**
Sugars	**0.000**	**0.000**
Benzene	**0.222**	**0.308**
Toluene	0.122	0.169
Benzene, ethyl-	0.033	0.045
Styrene	0.040	0.056
Benzene, butyl- *	0.015	0.021
Benzene, hexyl- *	0.012	0.016
Catechols	**0.042**	**0.059**
Hydroquinone; Benzene, 1,4-dihydroxy-	0.042	0.059
Aromatic Aldehydes	**0.000**	**0.000**
Aromatic Ketones	**0.000**	**0.000**
Lignin derived Phenols	**0.822**	**1.144**
Phenol	0.227	0.316
Cresol, o-; Phenol, 2-methyl-	0.040	0.056
Cresol, p-; Phenol, 4-methyl-	0.230	0.320
Cresol, m-; Phenol, 3-methyl-	0.090	0.125
Phenol, 2-ethyl-	0.017	0.023
Phenol, 2,4-dimethyl-	0.064	0.089
Phenol, 4-ethyl-	0.049	0.069
Phenol, ethyl-methyl-	0.013	0.019
Phenol, 4-vinyl-	0.092	0.128
Guaiacols / Methoxy phenols	**0.040**	**0.056**
Guaiacol, Phenol, 2-methoxy-	0.040	0.056
Syringols / Dimethoxy phenols	**0.350**	**0.487**
Syringol; Phenol, 2,6-dimethoxy-	0.076	0.106
Syringol, 4-ethyl-	0.171	0.238
Syringol, 4-vinyl-	0.102	0.143
Miscellaneous	**0.000**	**0.000**
Nitrogen containing compounds	**3.267**	**4.546**
Pyridine *	0.022	0.031
Pyridine, 2-methyl- *	0.015	0.021
Pyridine, dimethyl- MW 107 *	0.007	0.010
poss: Butanenitrile, 3-methyl- ***	0.017	0.024
unknown amine compound MW 99 ****	0.043	0.060
Pyrrole *	0.108	0.150
poss: Pyrazole compound MW 112 ****	0.011	0.015
Pentanenitrile, 4-methyl- *	0.029	0.041
similar to Pentanone, amino-methyl- (43,58,100) ***	0.902	1.255
poss: Pyrrole compound MW 137 ****	0.123	0.171
poss: Butanamide, 3-methyl- ***	0.016	0.022
poss: unknown Nitroso-phenyl compound MW 148 ****	0.020	0.028
poss: Piperidone, tetramethyl- MW 155 *	0.237	0.330
poss: unknown Nitroso-phenyl compound MW 162 ****	0.020	0.028

poss: Benzyl nitrile MW 117 ***	0.039	0.055
poss: 3-Pyridinol MW 95 ***	0.100	0.139
Benzenepropanenitrile MW 131 *	0.024	0.033
Indole MW 117 *	0.122	0.170
Indole, 3-methyl- MW 131 *	0.047	0.066
poss: 2,4-Imidazolidinedione, 5-methyl- MW 114 ***	0.047	0.066
poss: Phenylisocyanate, dimethy- ****	0.021	0.029
poss: unknown aliphatic Nitrile compound ****	0.015	0.021
poss: Hydantoin or imidazolidinedione compound: base mass 100 MW ? ****	0.066	0.092
poss: Hydantoin or imidazolidinedione compound: base mass 100 MW ? ****	0.059	0.082
poss: Hydantoin or imidazolidinedione compound: base mass 100 MW ? ****	0.017	0.024
poss: Pyrrol compound MW 154 ****	0.033	0.045
poss: Hydantoin or imidazolidinedione compound: base mass 100 MW ? ****	0.016	0.023
poss: Pyrrol compound: base mass 70, MW 154 ****	0.284	0.395
poss: unknown aliphatic Nitrile compound ****	0.031	0.043
unknown Pyrrol compound ****	0.035	0.049
aliphatic amide chain MW 212 ***	0.078	0.109
aliphatic amide chain MW ? ***	0.598	0.832
aliphatic amide compound MW 238 ***	0.065	0.090
Homologous aliphatic chains	**1.951**	**2.715**
unknown saturated aliphatic chain **	0.025	0.035
unknown saturated aliphatic chain **	0.016	0.022
unknown unsaturated aliphatic chain MW ? **	0.022	0.030
unknown saturated aliphatic chain **	0.014	0.020
unknown unsaturated aliphatic chain MW ? **	0.023	0.032
unknown saturated aliphatic chain **	0.021	0.029
unknown unsaturated aliphatic chain MW ? **	0.023	0.032
unknown unsaturated aliphatic chain MW ? **	0.023	0.031
unknown unsaturated aliphatic chain MW ? **	0.027	0.037
unknown aliphatic chain **	0.012	0.016
unknown unsaturated aliphatic chain MW ? **	0.017	0.023
unknown unsaturated aliphatic chain MW ? **	0.032	0.045
unknown aliphatic chain **	0.018	0.025
unknown saturated aliphatic chain **	0.014	0.020
unknown unsaturated aliphatic chain **	0.024	0.033
unknown saturated aliphatic chain **	0.033	0.046
unknown unsaturated aliphatic chain **	0.016	0.022
unknown unsaturated aliphatic chain **	0.035	0.049
unknown aliphatic chain **	0.041	0.058
unknown unsaturated aliphatic chain **	0.054	0.075
unknown saturated aliphatic chain **	0.019	0.026
unknown unsaturated aliphatic chain **	0.025	0.035
poss: Heptadecene MW 238 *	0.118	0.165
Heptadecene isomere MW 238 *	0.094	0.130
unknown saturated aliphatic chain **	0.026	0.036
poss: unknown aliphatic acid, methyl ester MW ? **	0.015	0.022
Octadecenoic acid, methyl ester MW 222 *	0.075	0.104
unknown aliphatic chain **	0.032	0.045
poss: Octadecenoic acid (Oleic acid) **	0.767	1.067
unknown aliphatic chain **	0.033	0.045
unknown aliphatic chain **	0.079	0.109
unknown aliphatic chain **	0.181	0.251
other unknown compounds	**0.788**	**1.096**

unknown compound: base mass 225, MW 240 ****	0.016	0.022
no library spectrum found: base mass 58 ****	0.625	0.869
no library spectrum found: base mass 42,95 MW ? ****	0.097	0.135
no library spectrum found: base mass 93, MW 186 ****	0.035	0.049
no library spectrum found base mass 58....128,200 ****	0.015	0.020
FID peak without MS peak	**0.096**	**0.133**
no MS peak found	0.096	0.133

* = from library search with high quality, no standard, RRF = 1
** = homologous aliphatic compounds, MS = ?, RRF = 1
*** = best library search spectrum, quality 50-70%, RRF = 1
**** = best library search spectrum, quality 40-50%, RRF = 1 / no library spectrum found

These results show that the vapour phase products of the pyrolysis are rich in lignin pyrolyse product. These compounds are not considered to be particularly useful. Accordingly, it would be of benefit to reduce the fraction of these compounds and to increase the fraction of lower molecular weight organic compounds. In effect, it is particularly preferred to shift the peaks shown to the right of Fig. 2 further to the left - this corresponds with lower molecular weight organic compounds.

The present inventors consider that one particularly suitable way to achieve this goal is to provide a pyrolysis process in which a large proportion of char is provided in relation to the biomass. It is particularly preferred to use a ratio of 1:3 biomass to char by weight in a continuous intermediate pyrolysis process. The char operates to provide useful sites for cracking reactions during the pyrolysis process, so that at least some of the higher organics molecules are broken down to lower molecular weight

compounds. In addition, the char provides the opportunity for the formation of syngas using the large quantity of water vapour present in the biomass reactor, by the reaction:

$$C + H_2O \rightarrow CO + H_2$$

Fig. 3 shows a schematic longitudinal cross sectional view of a pyrolysis apparatus 10 according to a preferred embodiment of the invention. The apparatus 10 includes a screw kiln having a first screw or auger 12 mounted on a rotatable shaft 14, the rotatable shaft 14 and first screw 12 rotating with respect to an inner cylindrical wall 16. Rotation of the first screw provides a means for conveying solids axially along the bore of the inner cylindrical wall 16. The inner cylindrical wall 16 has a second screw 18 fixed to its outer surface. Inner cylindrical wall 16 is also mounted for rotation in the contrary direction to the rotation of the rotatable shaft 14. Consequently, second screw 18 rotates with respect to an outer, fixed, cylindrical wall 20. Thus, rotation of the second screw provides a means for conveying solids axially along the space between the inner cylindrical wall 16 and the outer cylindrical wall 20.

In use, biomass feedstock is added into a feed inlet 22 which directs the biomass feedstock to one end of the first screw 12. The biomass feedstock is prevented from entering

the space between the inner cylindrical wall 16 and the outer cylindrical wall 20.

At the start-up of the process, pre-formed char may be added to the biomass feedstock at the inlet 22 in order to achieve a preferred ratio by weight of biomass to char of 1:3.

The pyrolysis of the biomass takes place in the interior of the cylindrical space bounded by inner cylindrical wall 16. The biomass and char is mixed and conveyed along the cylindrical space by the first screw 12. At the end of the cylindrical space distal from the inlet 22, there is a vapour outlet 24 and an ash outlet 26. The vapour outlet conveys the vapour and gas phase products of the pyrolysis process. Preferably at least a portion of these products are conveyed to a gasifier apparatus (not shown) for further processing.

The pyrolysis process also produces char, in addition to the char that was present prior to the pyrolysis process. At least a portion of the char conveyed along the cylindrical space is allowed to fall via an aperture (not shown) into the annular space bounded by the inner cylindrical wall 16 and the outer cylindrical wall 20. The action of the second screw 18 conveys this char in the reverse direction along the annular space. Inlets 28 for air and water may be provided along this annular space. The purpose of these

inlets is to introduce controlled amounts of air and/or water into the char in the annular space. The oxygen in the air allows a portion of the char to combust, producing CO_2 and heat. This heat drives the pyrolysis process (which is endothermic) in the cylindrical space. The introduction of water allows a reforming reaction to occur, producing syngas which can be extracted and used as a fuel for electricity generation. The water may be steam or vapour, e.g. from drying of the biomass.

The remainder of the char is conveyed back towards the inlet end of the apparatus. Using a paddle (not shown) or similar device, the char that reaches region 30 of the apparatus is lifted into the inlet end of the cylindrical space, in order to be conveyed along using the first conveyor.

In this way, the apparatus uses the char produced in pyrolysis as a heat carrier for subsequent pyrolysis, the high proportion of char to biomass promoting the formation of a greater proportion of useful gaseous products for power generation.

Waste heat from the apparatus may be used to dry biomass before inserting it into feed inlet 22.

In the case where the apparatus is heated with a heat transfer medium at a high temperature (e.g. gasifier gases

at temperatures of about 800°C or combustion gas products at temperatures of about 1000°C), such a heat transfer medium may be applied to the external surface of outer cylindrical wall 20. Then, the char being conveyed by the second conveying means may act as a heat transfer buffer. The char then buffers the temperature "seen" by the pyrolysis reactor and by the fresh biomass being introduced into the pyrolysis reactor.

Although Fig. 3 shows the use of screw conveyor 12 to mix and convey the solid material in the central cylindrical space, the present inventors envisage alternative embodiments, such as an embodiment using one or more mixing ploughs to mix the char and the biomass feedstock, the reactor being heated by an external heat source (this embodiment is not illustrated). The ploughs operate to mix the solid content of the pyrolysis reactor, but do not provide a net conveyance of the solid content of the reactor, unlike the screw conveyor 12 of the embodiment illustrated in Fig. 3. When the system works in a continuous manner (as is preferred), the continuous addition of new biomass leads to the continuous formation of new char. An overflow for excess char is provided, in order that the ratio of biomass : char by weight can be maintained close to the ratio of 1 : 3. An outlet for the vapour and gas products is provided.

Fig. 4 shows a longitudinal schematic view of a further preferred embodiment of a pyrolysis apparatus according to the present invention. Figs. 5-7 show longitudinal schematic views of the main components of the apparatus shown in Fig. 4, and so the features of these drawings will be described together.

The pyrolysis apparatus 50 of Fig. 4 includes an outer cylindrical wall 52 (see also Fig. 1). The apparatus is supported on supports 54, 56, 58 and has electric heating means, such as resistance elements 60, 62 formed around the outer cylindrical wall 52. In alternative embodiments (e.g. larger scale embodiments relying solely on combustion in order to provide the heat required to drive pyrolysis), there may instead be provided insulation around the outer cylindrical wall 52.

Towards a proximal end of the apparatus is provided a biomass inlet port 64. Towards a distal, opposite, end of the apparatus is provided a gas and vapour products outlet port 66. Also towards this distal end of the apparatus is provided a char outlet port 68.

Within the space enclosed by the outer cylindrical wall is provided a first screw auger 70 disposed within a second screw auger 80. These components are shown more clearly in Fig. 7 and 6, respectively.

In Fig. 6, the second screw auger has a substantially tubular wall 82 with two helical screws 84, 86 extending along the outer surface of the tubular wall 82, from the proximal end to the distal end. These helical screws are adapted to scrape along the inner surface 53 of the outer cylindrical wall 52 of the apparatus, when the second screw auger is rotated within the apparatus.

At the proximal end of the second screw auger are provided feedstock inlet slots 88. In this embodiment, four feedstock inlet slots are provided, equispaced circumferentially and communicating through the tubular wall 82. Fewer or more inlets slots may be provided, as desired.

At the distal end of the second screw auger are provided outlet slots 90. These slots allow fluid and solid material to escape from the interior of the second screw auger. Corresponding slots 92 are provided in the helical screws, in order to avoid preventing solid material from escaping freely from the interior of the second screw auger.

At the distal extremity of the second screw auger is provided a bearing surface 94 for allowing rotation of the second screw auger in the apparatus. A corresponding bearing surface 98 is provided in the housing. At the proximal extremity of the second screw auger is provided

engagement means (e.g. screw holes 100) to allow rotation of the second screw auger to be driven by a corresponding driving means (e.g. drive plate 104 and drive shaft 106). In Fig. 5, drive shaft 106 is coaxial with drive shaft 108, which is for driving the rotation of the first screw auger 70, described next.

First screw auger 70 includes a solid shaft 72 having a single helical screw 74 extending therealong. In use, the single screw engages with inner surface 83 of the tubular wall 82 of the second screw auger, in order to convey material along the interior of the second screw auger.

At the distal end of the first screw auger is provided a bearing surface 76, for rotational cooperation with a corresponding bearing surface 77 of the housing. At the proximal end of the first screw auger is provided engagement means 78 to allow rotation of the first screw auger to be driven by the corresponding drive shaft 108.

The housing includes a proximal end plate 110 and distal end plate 112. Proximal end plate 110 includes seal means 114 to provide a suitable seal between the proximal end plate 110 and the drive shaft 106. Further seal means 116 are provided to provide a suitable seal between the coaxial drive shafts 106 and 108.

In use, biomass feedstock (e.g. wood chips) and a heat carrier (e.g. metal balls, ceramic balls or SiC balls) are delivered to inlet 64. The second screw auger is rotated By rotation of drive shaft 106) in order to provide a conveying direction from the distal end to the proximal end. Thus, the biomass feedstock are not conveyed by the second screw auger. Instead, the biomass feedstock and heat carrier gradually falls though the slots 88 in the proximal end of the second screw auger.

The first screw auger is rotated (by rotation of drive shaft 108) in order to provide a conveying direction from the proximal end to the distal end. Thus, the biomass feedstock and the heat carrier are conveyed and mixed along the interior of the second screw auger. This part of the apparatus is maintained at a temperature in the range 300-600°C in order to subject the biomass feedstock to pyrolysis. Typically, this process produces char (solid) and gaseous products and vapour products. The products are able to escape from the interior of the second screw auger via slots 90. The vapour and gaseous products are extracted from the apparatus via outlet 66. Some of the char and the heat carrier fall through slots 90 and are conveyed back along the apparatus (i.e. from the distal and to the proximal end) by the second auger. The remainder of the char is conveyed to outlet 68. This char may be recycled and used as heat carrier, or may alternatively be used in combustion to

provide heat for the pyrolysis, or may still further be used for combustion in a CHP process.

In alternative embodiments, the heat carrier (typically balls) my be substantially prevented from falling though slots 90 and may instead be conveyed to outlet 68. In this case, some or all of the heat carrier balls may be recycled for use again at the inlet 64 of the apparatus.

It should be noted that in other embodiments, the double helical system described with respect to Figs. 4-7 need not be used. For example, two separate (but preferably adjacent) helical screws may be used as the first and second conveying means.

The apparatus 50 may be connected to an inlet of a gasifier apparatus. In particular, it may be advantageous to connect the outlet 66 of the apparatus to an inlet of a gasifier apparatus. For example, the gasifier may itself consume biomass feedstock such as wood chips. The outlet 66 from the pyrolysis apparatus may be provided to the pyrolysis zone of the gasifier. This provides benefits to the gasification process. In particular, it provides substantially ash-free pyrolysis vapours (and water) into the correct location in the gasifier to improve the efficiency of the gasifier. It is considered that this can

potentially double the throughput for the same size downdraft gasifier.

Alternatively, the pyrolysis apparatus may be integrated with the gasifier apparatus. In this way, heat generated by the gasification process may provide the heat necessary to drive the pyrolysis in the pyrolysis apparatus.

The pyrolysis apparatus may operate at an internal pressure above atmospheric pressure. For example, the pyrolysis apparatus may operate at 200-300 mbar over atmospheric pressure. This allows the vapour pyrolysis products effectively to be pumped into the gasifier apparatus, driven by the over pressure.

The pyrolysis apparatus may be pressurised from, e.g. 3 mbar for some applications, or up to about 30 bar for other applications. This allows coupling to a gasifier with its pressure drop. In place of the gasifier, or additional to the gasifier, the pyrolysis apparatus may be coupled to other pressurised reactors, such as a reformer or a hydrogenation system.

Fig. 8 shows a schematic view of a pyrolysis apparatus 50 integrated with a gasifier apparatus 200. The gasifier apparatus 200 includes an inlet 202 for biomass, typically wood-based biomass. The biomass is gravity-fed into a

pyrolysis zone 204 of the gasifier, there being an air inlet 206 slightly below the pyrolysis zone 204. Below the air inlet in the gasifier is a reforming and gasification zone 208, above a char bed 210. At the base of the gasifier apparatus is ash section 212.

Outlet 66 of the pyrolysis apparatus 50 transfers pyrolysis vapour from the pyrolysis apparatus into the gasification zone 208, via duct 214. The gasifier has an outlet 216 for syngas generated by the gasifier.

The preferred embodiments have been described by way of example only. Modifications of these embodiments, further embodiments and modifications thereof will be apparent to the skilled person and as such are within the scope of the present invention.

CLAIMS

1. A biomass pyrolysis process in which biomass feedstock is mixed with a heat carrier, the heat carrier at least partly comprising char, the ratio by weight of biomass to char being 1:1 to 1:20.

2. A biomass pyrolysis process according to claim 1 carried out in a pyrolysis reactor in which the solid feedstock components are conveyed along the reactor.

3. A biomass pyrolysis process according to claim 2 wherein the pyrolysis reactor is a screw/auger kiln.

4. A biomass pyrolysis process according to any one of claims 1 to 3 wherein the process is operated at a temperature of 600°C or lower.

5. A biomass pyrolysis process according to any one of claims 1 to 4 wherein at least a portion of the char produced in the pyrolysis process is recycled back into the pyrolysis process.

6. A biomass pyrolysis process according to any one of claims 1 to 5 wherein at least a portion of the products of the pyrolysis process is conveyed to a gasifier apparatus.

7. A biomass pyrolysis process according to claim 6 wherein the gasifier apparatus operates at a temperature of at least 700°C.

8. A biomass pyrolysis process according to claim 6 or claim 7 wherein further biomass is introduced into the gasifier.

9. A biomass pyrolysis process according to claim 8 wherein the further biomass introduced into the gasifier is low ash biomass.

10. A biomass pyrolysis process including the steps:
conveying biomass feedstock and heat transfer medium from respective biomass feedstock and heat transfer medium input ports through a pyrolysis zone of a biomass pyrolysis apparatus to produce at least solid and gaseous biomass pyrolysis products; and
conveying at least a portion of the solid products from an output port of the apparatus back to the heat transfer medium input port.

11. A biomass pyrolysis process according to claim 10 wherein the heat transfer medium includes solid heat carrier balls.

12. A biomass gasification process including a biomass pyrolysis process according to any one of claims 1 to 11, wherein vapour and/or gaseous products of the biomass pyrolysis process are provided to an inlet of a biomass gasification process.

13. A biomass gasification process according to claim 12 wherein the pyrolysis process is carried out at a pressure over atmospheric pressure of at least 50 mbar.

14. A biomass pyrolysis apparatus having:

a biomass feedstock input port;

a heat transfer medium input port;

a first conveying means for conveying the biomass feedstock and heat transfer medium through a pyrolysis zone of the apparatus;

an output port for solid products of the biomass pyrolysis; and

a second conveying means for conveying at least a portion of the solid products of the biomass pyrolysis back to the heat transfer medium input port, so that the heat transfer medium includes said solid products of the biomass pyrolysis.

15. A biomass pyrolysis apparatus according to claim 14 wherein the second conveying means is disposed in thermal contact with the first conveying means.

16. A biomass pyrolysis apparatus according to claim 14 or claim 15 wherein the second conveying means is disposed annularly around the first conveying means.

17. A biomass pyrolysis apparatus according to any one of claims 14 to 16, further having an air and/or water inlet for introducing air and/or water into the second conveying means for reaction with the char conveyed by the second conveying means.

18. A biomass pyrolysis apparatus according to any one of claims 14 to 17 wherein the heat transfer medium includes solid heat carrier balls.

19. A biomass gasification apparatus including a biomass pyrolysis apparatus according to any one of claims 14 to 18, wherein vapour and/or gaseous products of the biomass pyrolysis are provided to an inlet of the biomass gasification apparatus.

20. A biomass gasification apparatus according to claim 19, wherein the pyrolysis apparatus is adapted to carry out pyrolysis at a pressure over atmospheric pressure of at least 3 mbar.

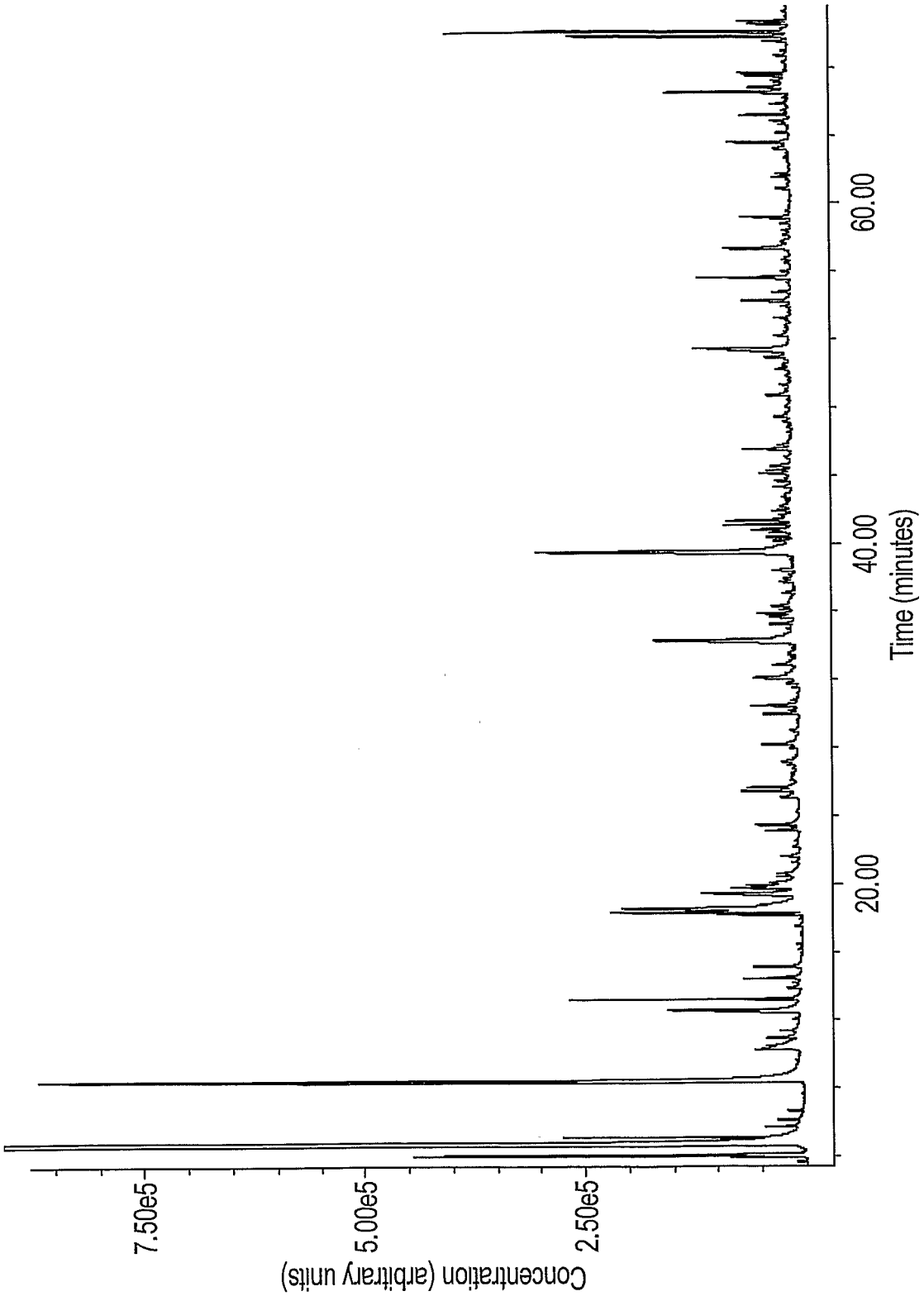
7.50e5
5.00e5
2.50e5
Concentration (arbitrary units)
20.00
40.00
60.00
Time (minutes)

FIG. 1

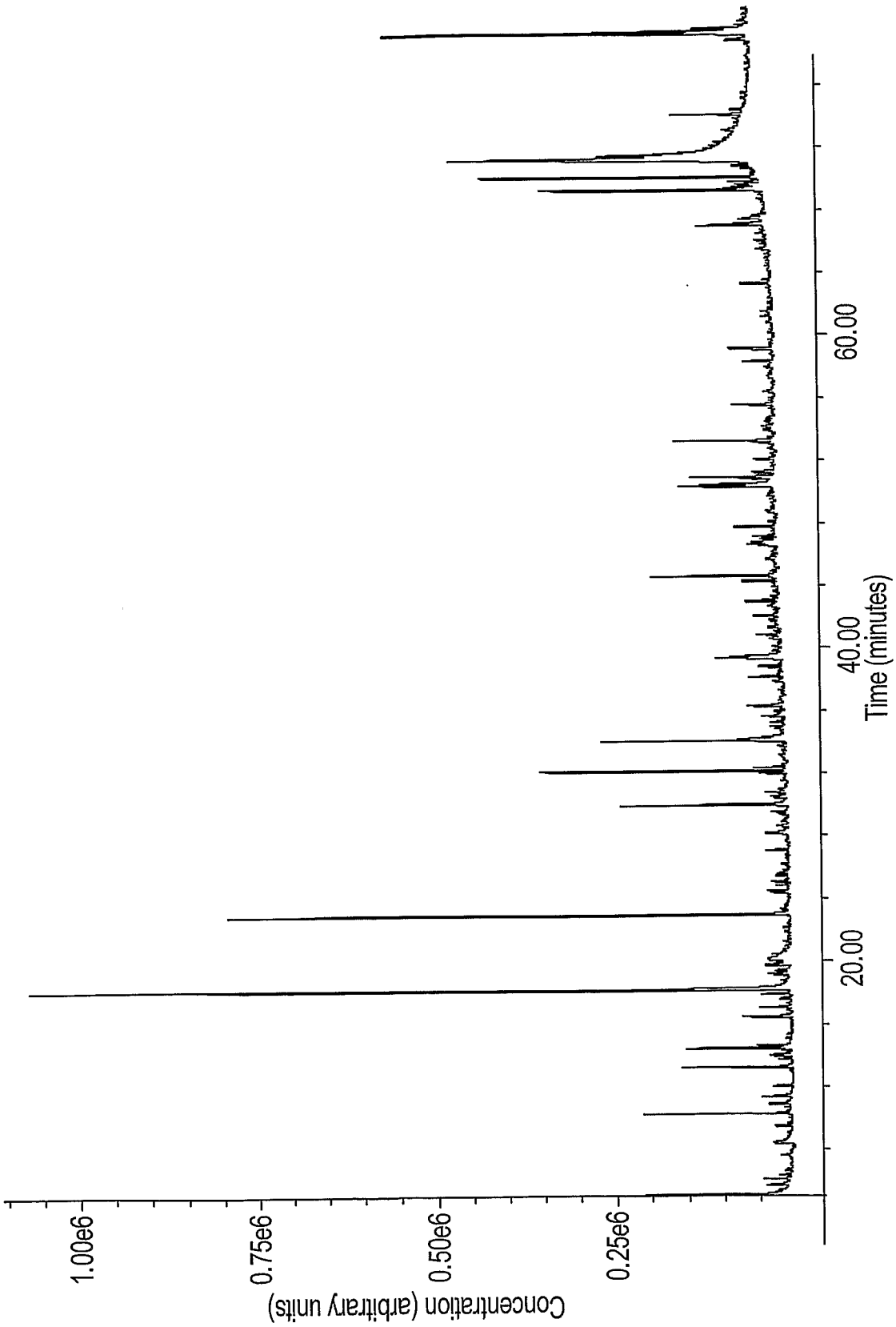
1.00e6
0.75e6
0.50e6
0.25e6
Concentration (arbitrary units)
20.00
40.00
60.00
Time (minutes)

FIG. 2

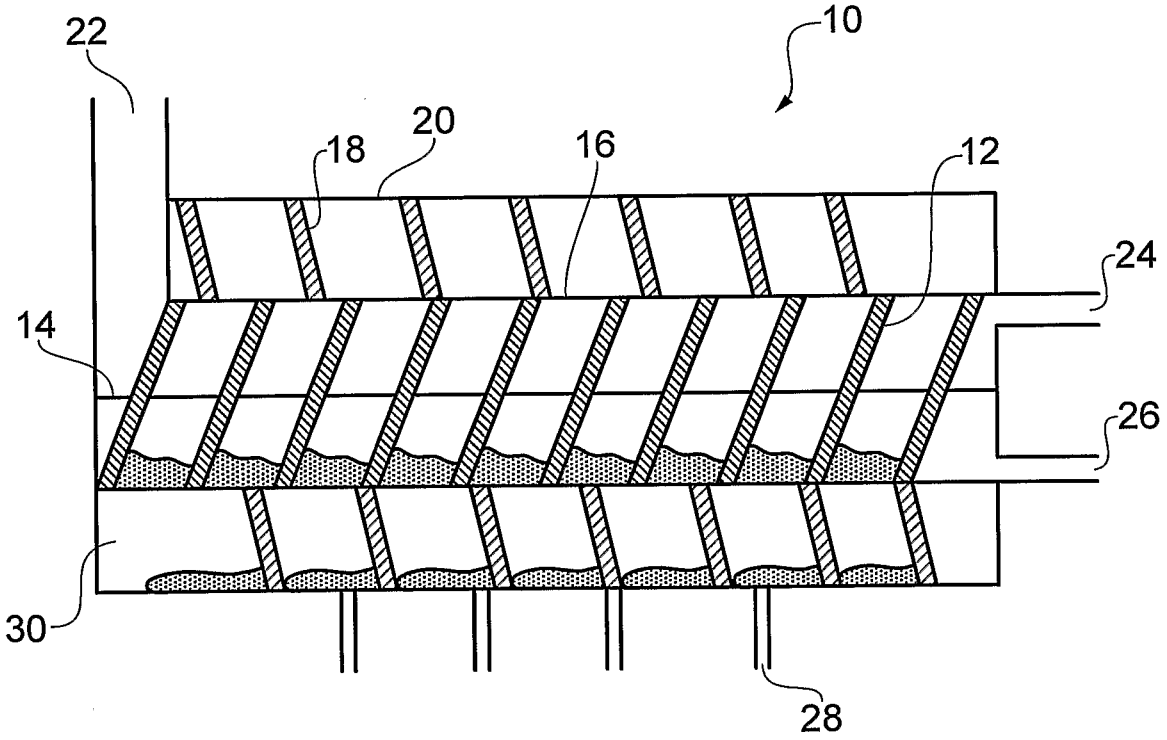

FIG. 3

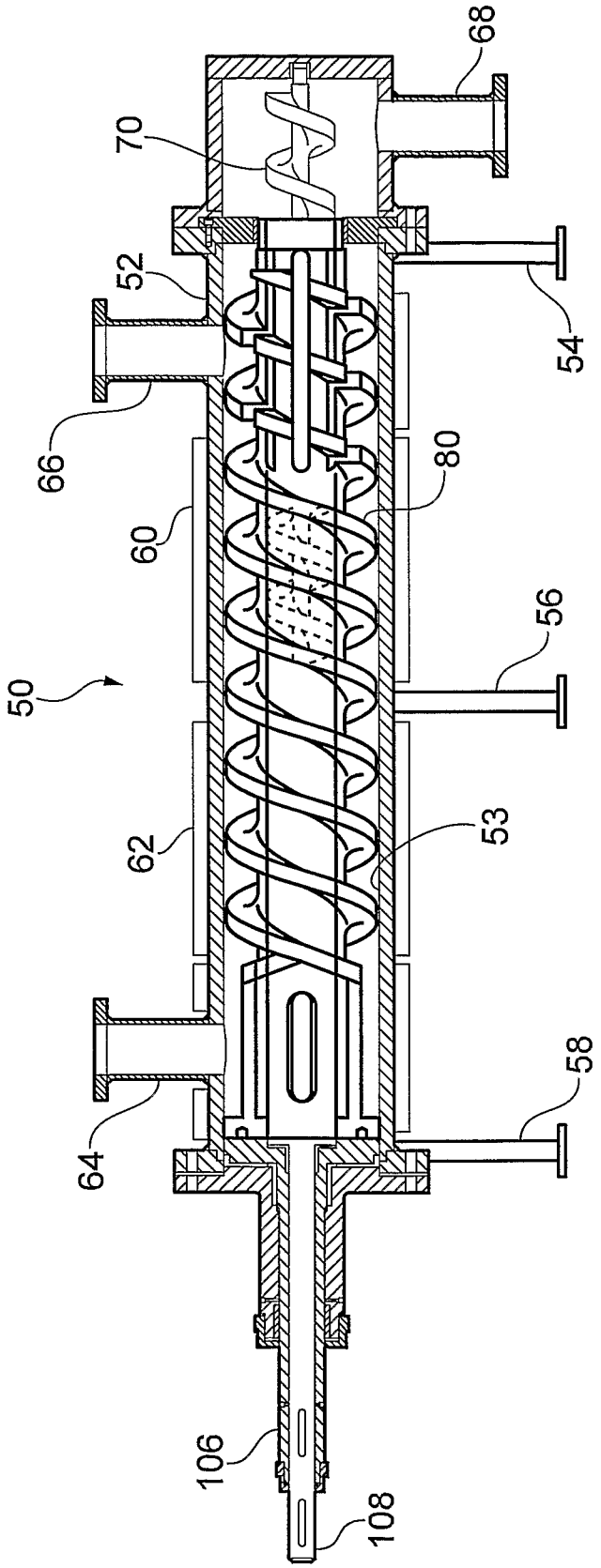

FIG. 4

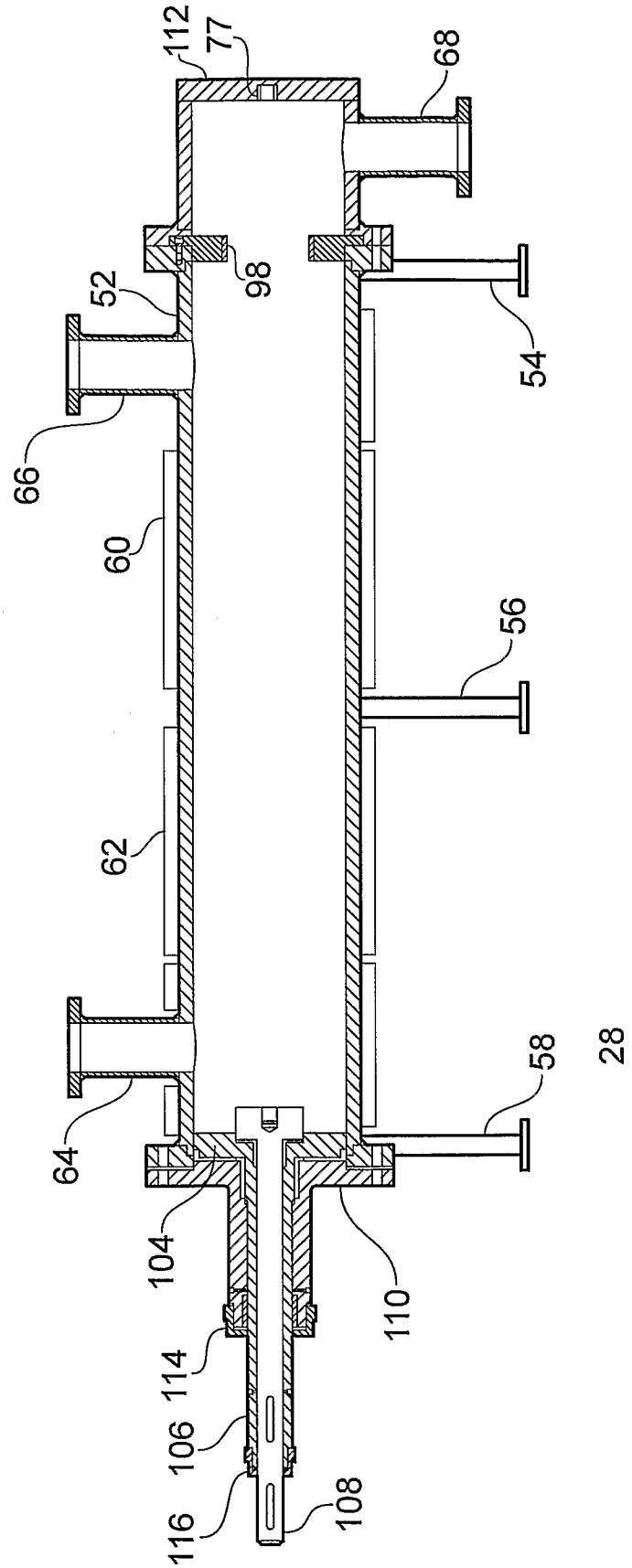

FIG. 5

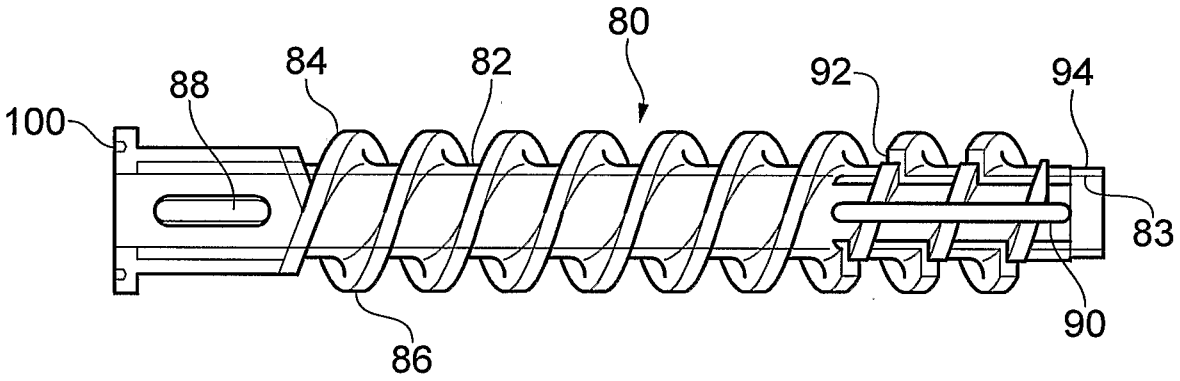

FIG. 6

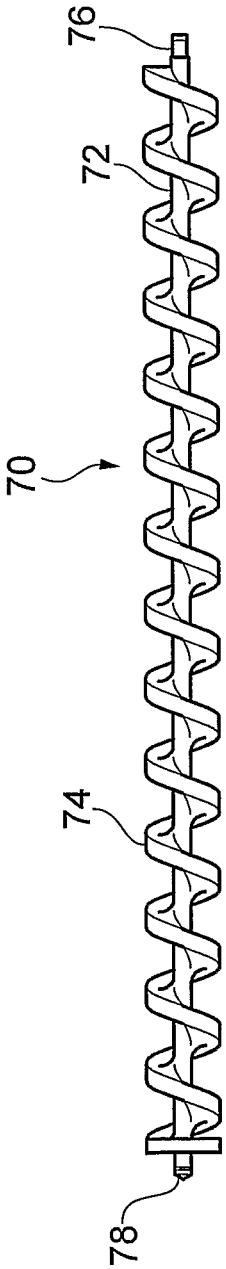

FIG. 7

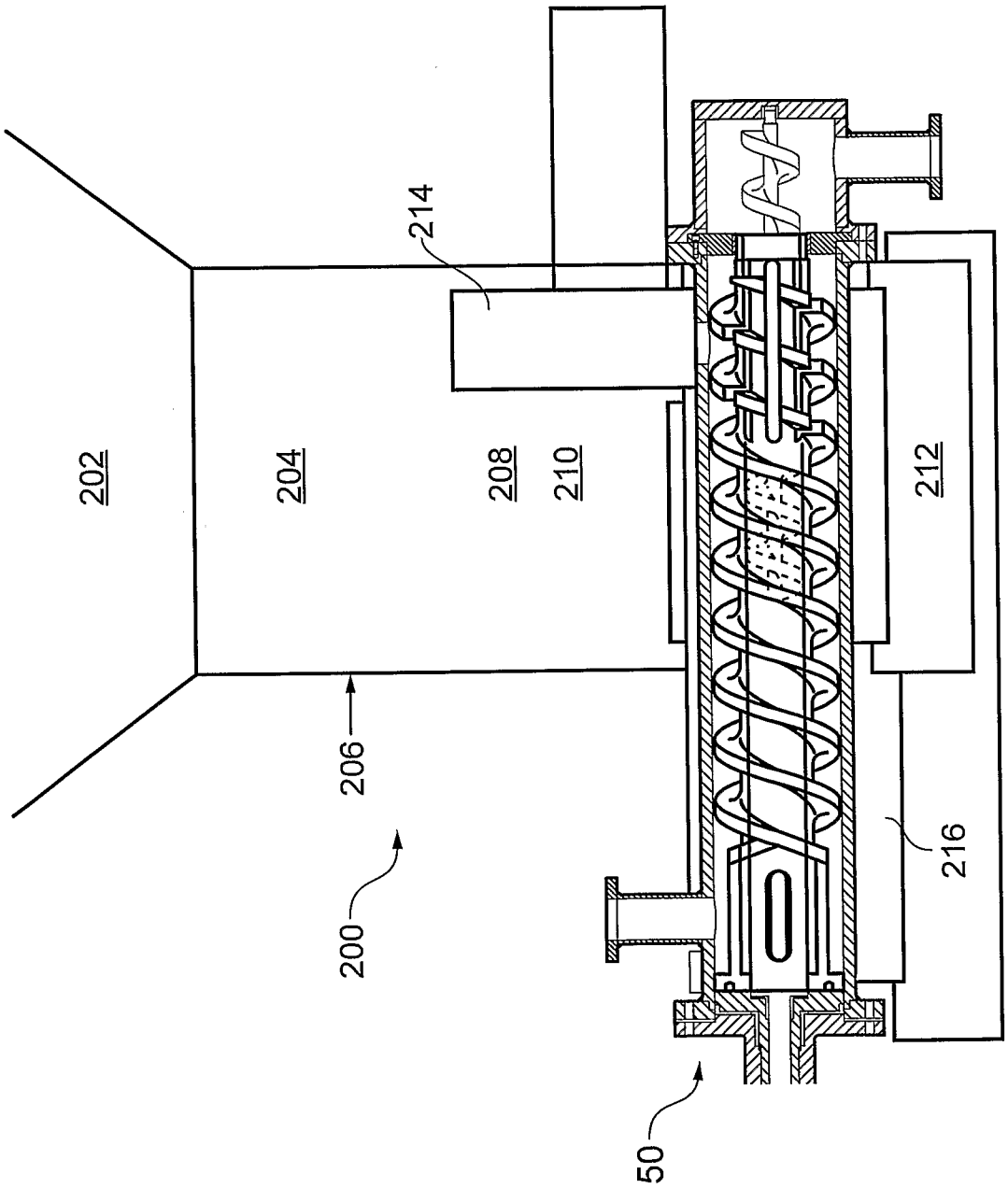

FIG. 8